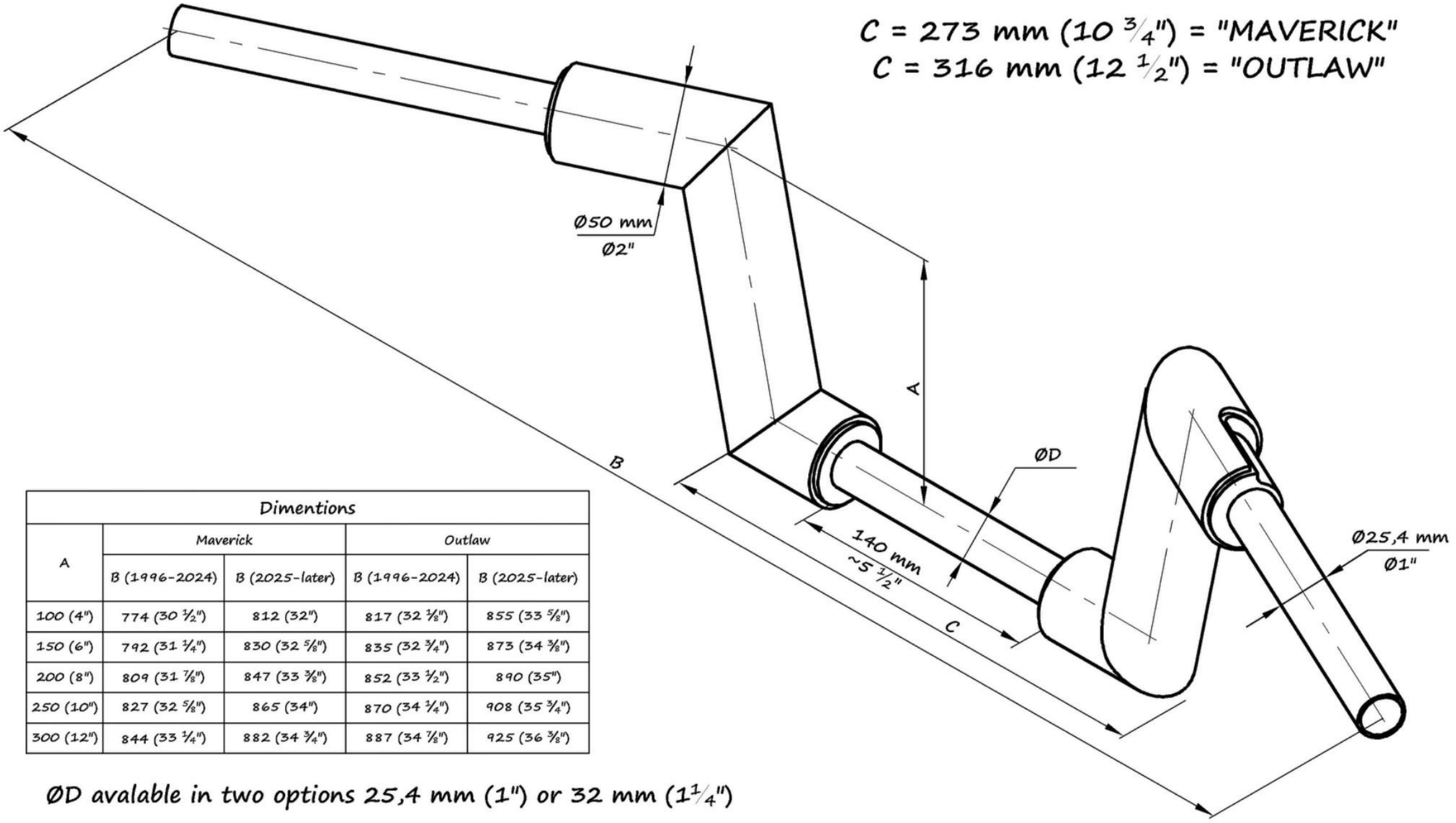

Dimentions				
A	Maverick		Outlaw	
	B (1996-2024)	B (2025-later)	B (1996-2024)	B (2025-later)
100 (4")	774 (30 1/2")	812 (32")	817 (32 1/8")	855 (33 5/8")
150 (6")	792 (31 1/4")	830 (32 5/8")	835 (32 3/4")	873 (34 3/8")
200 (8")	809 (31 7/8")	847 (33 3/8")	852 (33 1/2")	890 (35")
250 (10")	827 (32 5/8")	865 (34")	870 (34 1/4")	908 (35 3/4")
300 (12")	844 (33 1/4")	882 (34 3/4")	887 (34 7/8")	925 (36 3/8")

ØD avalable in two options 25,4 mm (1") or 32 mm (1 1/4")